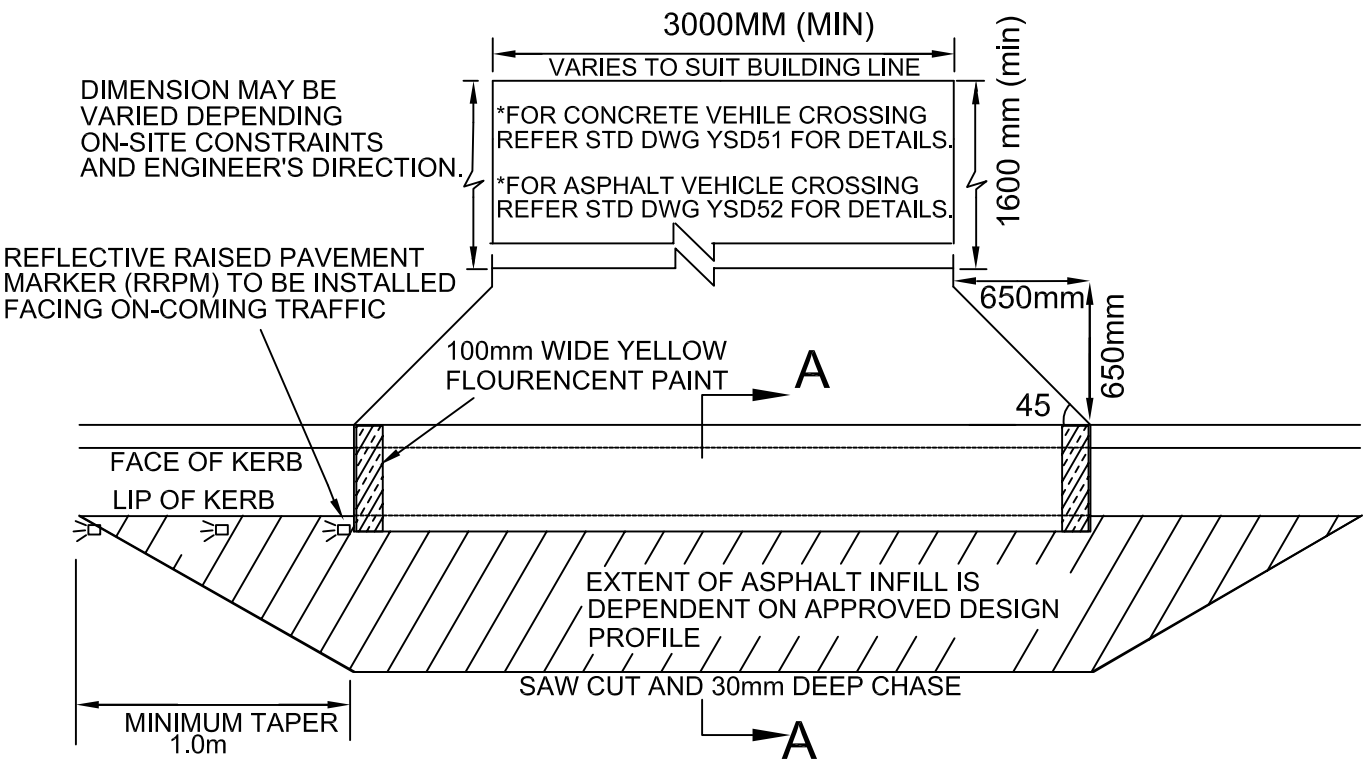

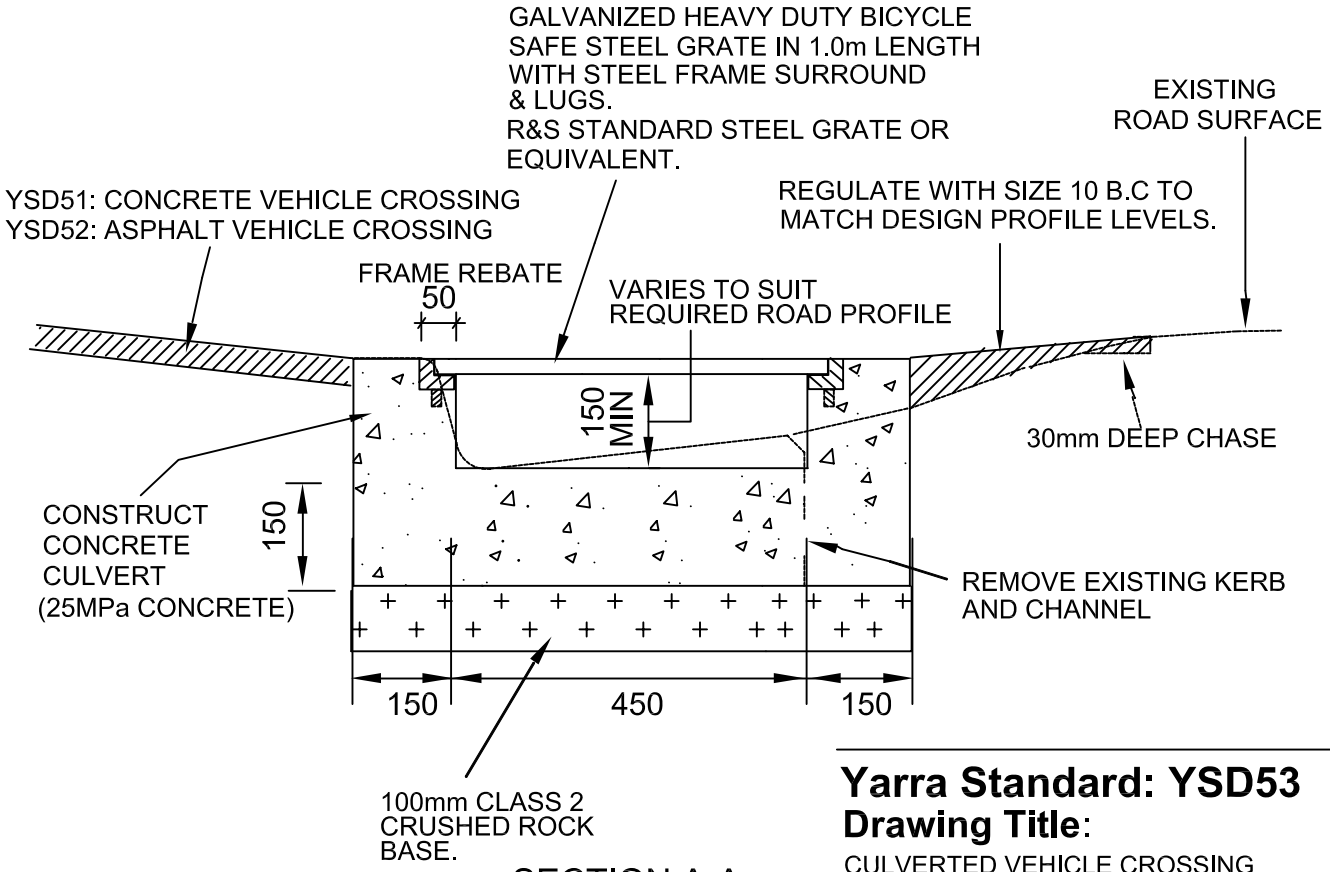

SECTION A-A

Yarra Standard: YSD53

Drawing Title:

CULVERTED VEHICLE CROSSING

Scale at A4 N.T.S
Updated 28/11/07

CITY OF YaRRA
Richmond Town Hall 333 Bridge Road Richmond PO Box 168 Richmond 3121
Phone (03) 9205 5010 Fax (03) 8417 6666